REVISIONS				
REV.	ZONE	DESCRIPTION	DATE	APPROVED
0		Initial release.	11/09/2006	CH
1	C5	Dim change: .800 to .807	12/12/2006	CH

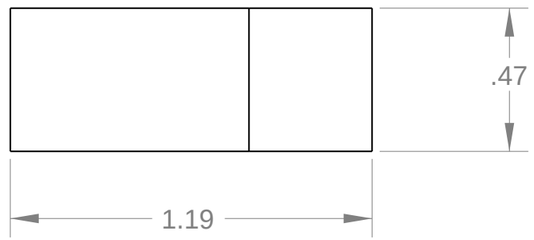

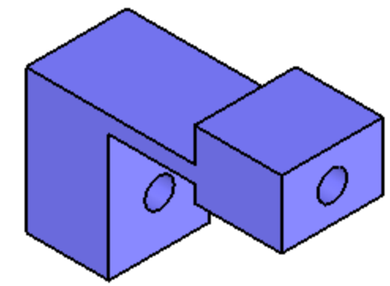

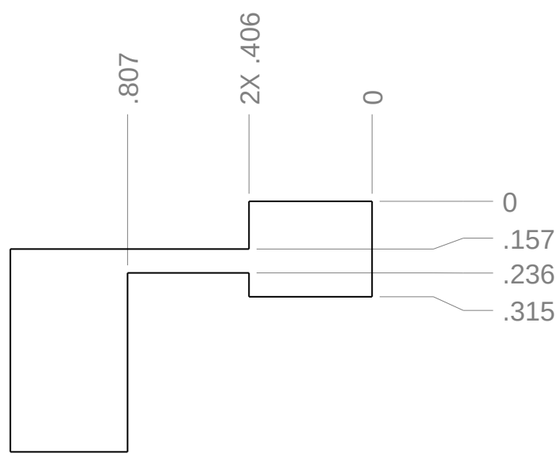

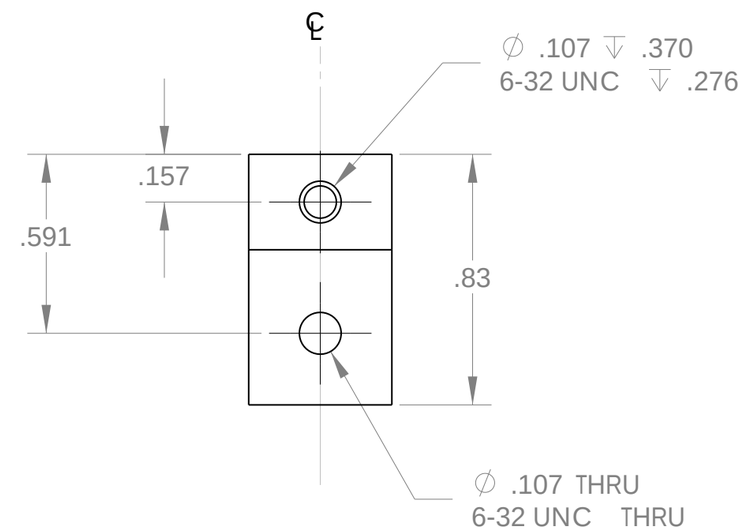

UNLESS OTHERWISE SPECIFIED DIMENSIONS ARE IN INCHES, REMOVE BURS AND BREAK SHARP EDGES 0.005-0.010

TOLERANCES: .XX± .010 .XXX± .005
ANGLES ±0.5° UNLESS NOTED,
ALL SURFACES 64 √ UNLESS NOTED

MATERIAL: 6061-T6 ALUM
QTY: 2

TRIPLESPEC

Cornell University
Center for Radiophysics and Space Research - Ithaca, NY 14853

	NAME:	INIT.	DATE:
DRAWN:	SCP	SCP	12/12/06
CHECKED:	CH	CH	12/12/06
APPROVED:			
FABRICATED:			

FILE: TRDOP44 0AP1 LEG FORE

TITLE: OAP1 LEG FORE

SIZE: B | DRAWING # TRDOP44 | REV 1

SCALE: 2:1 | DATE: 12/12/2006 | SHEET 1 OF 1