REVISIONS				
REV.	ZONE	DESCRIPTION	DATE	APPROVED
0		Initial Release.	10/26/2006	

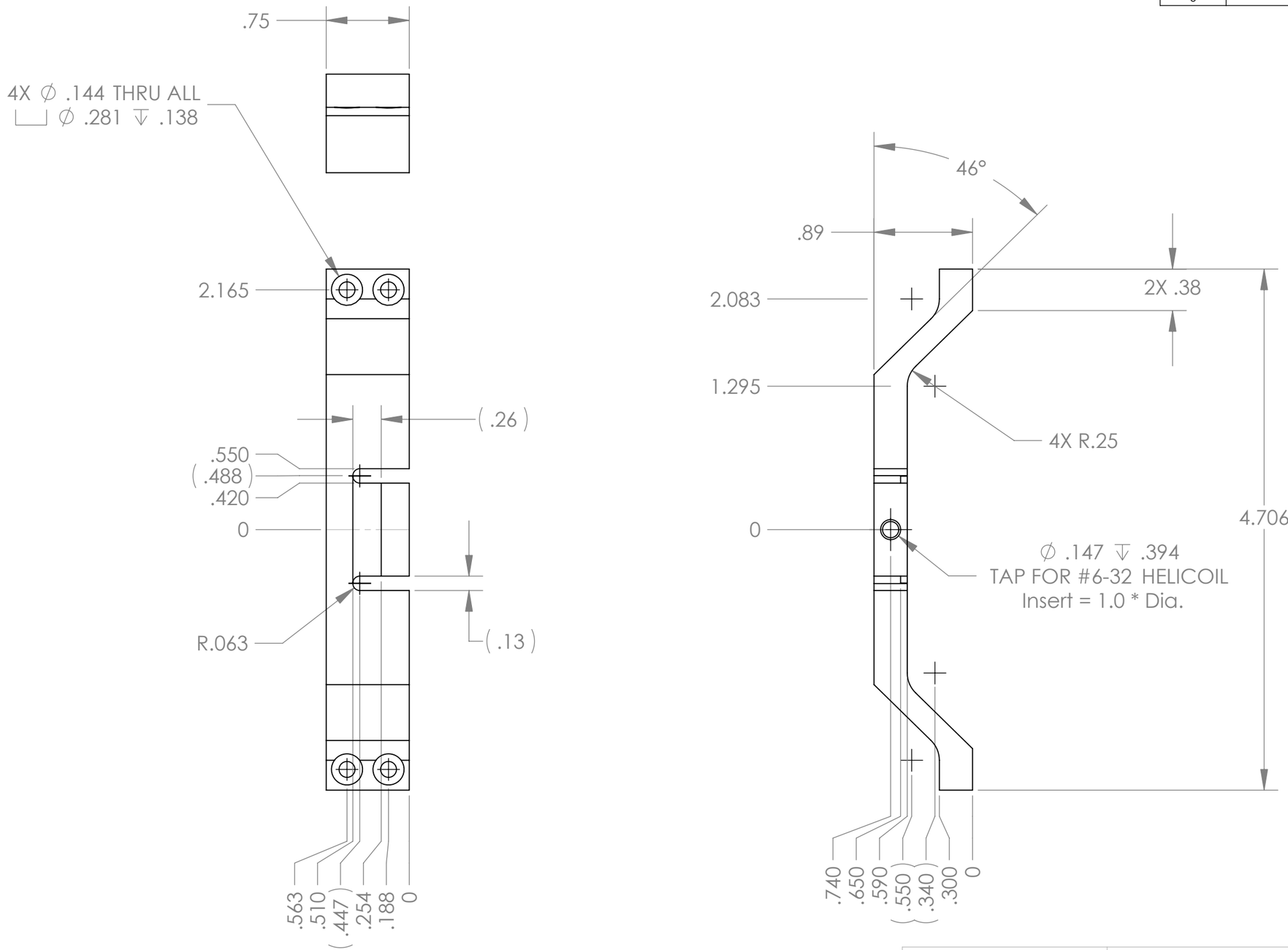

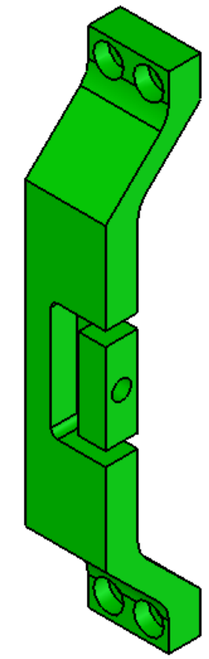

UNLESS OTHERWISE SPECIFIED DIMENSIONS ARE IN INCHES, REMOVE BURS AND BREAK SHARP EDGES 0.005-0.010

TOLERANCES: .XX ±.010 .XXX ±.005
ANGLES ±0.5° UNLESS NOTED,
ALL SURFACES 64 √ UNLESS NOTED

MATERIAL: 6061-T6 AL
QTY:3

TRIPLESPEC

Cornell University
Center for Radiophysics and Space Research - Ithaca, NY 14853

NAME:	INIT.	DATE:
DRAWN:	SCP	10/26/06
CHECKED:	CH	10/27/06
APPROVED:	CH	10OCT06
FABRICATED:		

FILE: TRDOP86 2ND OAP MOUNT BOT

TITLE: 2nd OAP MOUNT BOT

SIZE: B | DRAWING # TRDOP86 | REV 0

SCALE: 1:1 | DATE: 10/31/2006 | SHEET 1 OF 1