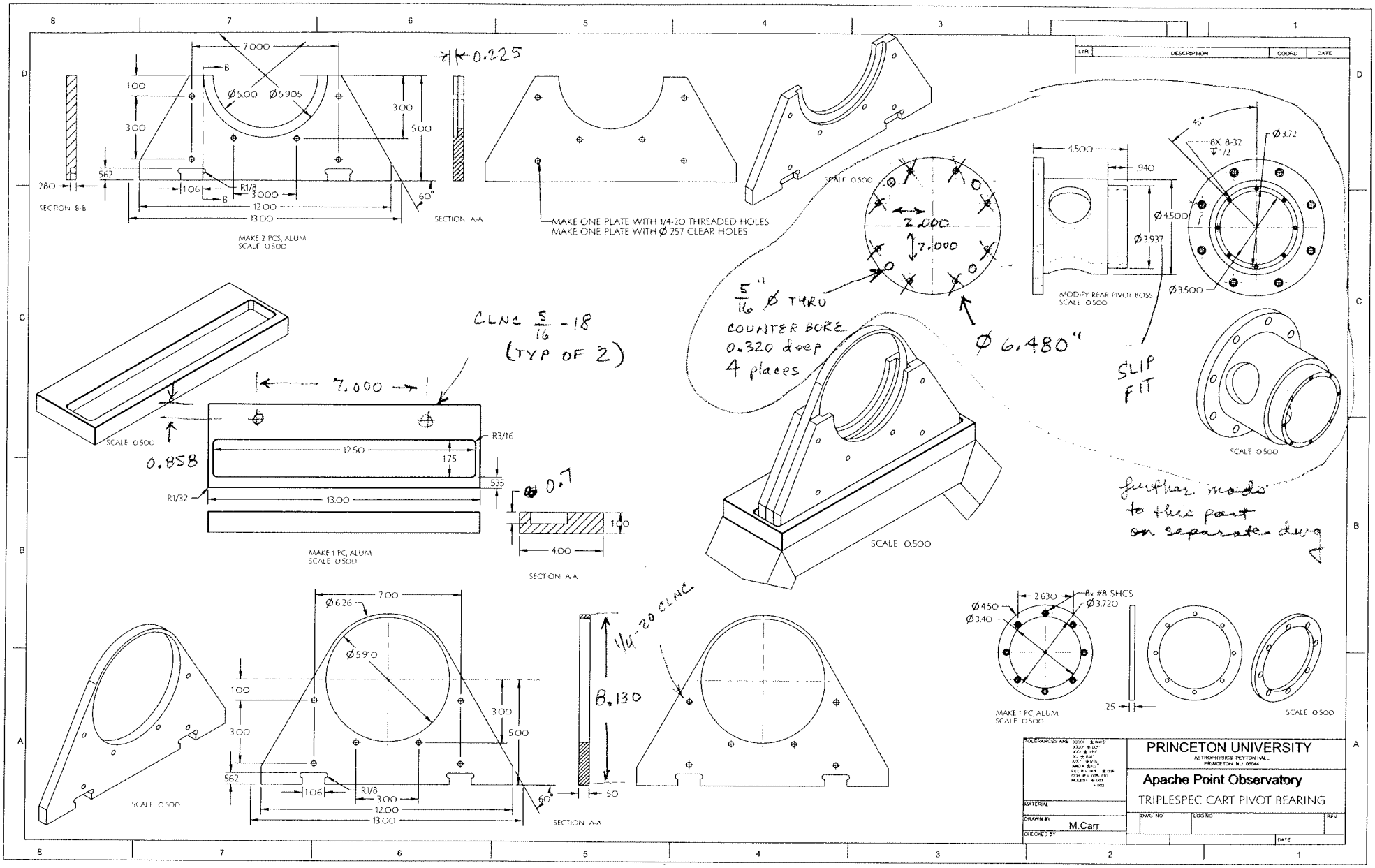
7.000
0.225
Ø5.00
Ø5.905
1.00
3.00
5.00
.562
.280
1.06
R1/8
3.000
12.00
13.00
60°
SECTION B-B
SECTION A-A
MAKE 2 PCS, ALUM
SCALE 0.500
MAKE ONE PLATE WITH 1/4-20 THREADED HOLES
MAKE ONE PLATE WITH Ø .257 CLEAR HOLES
SCALE 0.500
2.000
7.000
5/16" Ø THRU
COUNTER BORE
0.320 deep
4 places
Ø 6.480"
4.500
.940
Ø4.500
Ø3.937
Ø3.500
45°
8X, 8-32
1/2
Ø3.72
MODIFY REAR PIVOT BOSS
SCALE 0.500
SLIP
FIT
SCALE 0.500
CLNC 5/16 -18
(TYP OF 2)
7.000
R3/16
12.50
1.75
.535
R1/32
13.00
0.858
SCALE 0.500
MAKE 1 PC, ALUM
SCALE 0.500
0.7
1.00
4.00
SECTION A-A
SCALE 0.500
further mods
to this part
on separate dwg
7.00
Ø6.26
Ø5.910
1.00
3.00
5.00
.562
1.06
R1/8
3.00
12.00
13.00
60°
SCALE 0.500
1/4-20 CLNC
8.130
.50
SECTION A-A
2.630
8x #8 SHCS
Ø3.720
Ø4.50
Ø3.40
.25
MAKE 1 PC, ALUM
SCALE 0.500
SCALE 0.500
LTR
DESCRIPTION
COORD
DATE
TOLERANCES ARE
MATERIAL
DRAWN BY
M.Carr
CHECKED BY
PRINCETON UNIVERSITY
ASTROPHYSICS PEYTON HALL
PRINCETON, N.J. 08544
Apache Point Observatory
TRIPLESPEC CART PIVOT BEARING
DWG NO
LOG NO
REV
DATE