REVISIONS				
REV.	ZONE	DESCRIPTION	DATE	APPROVED
0		Initial Release.	8/31/2004	

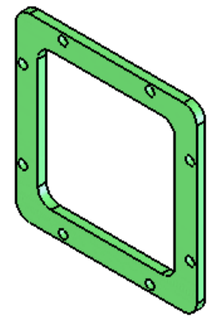

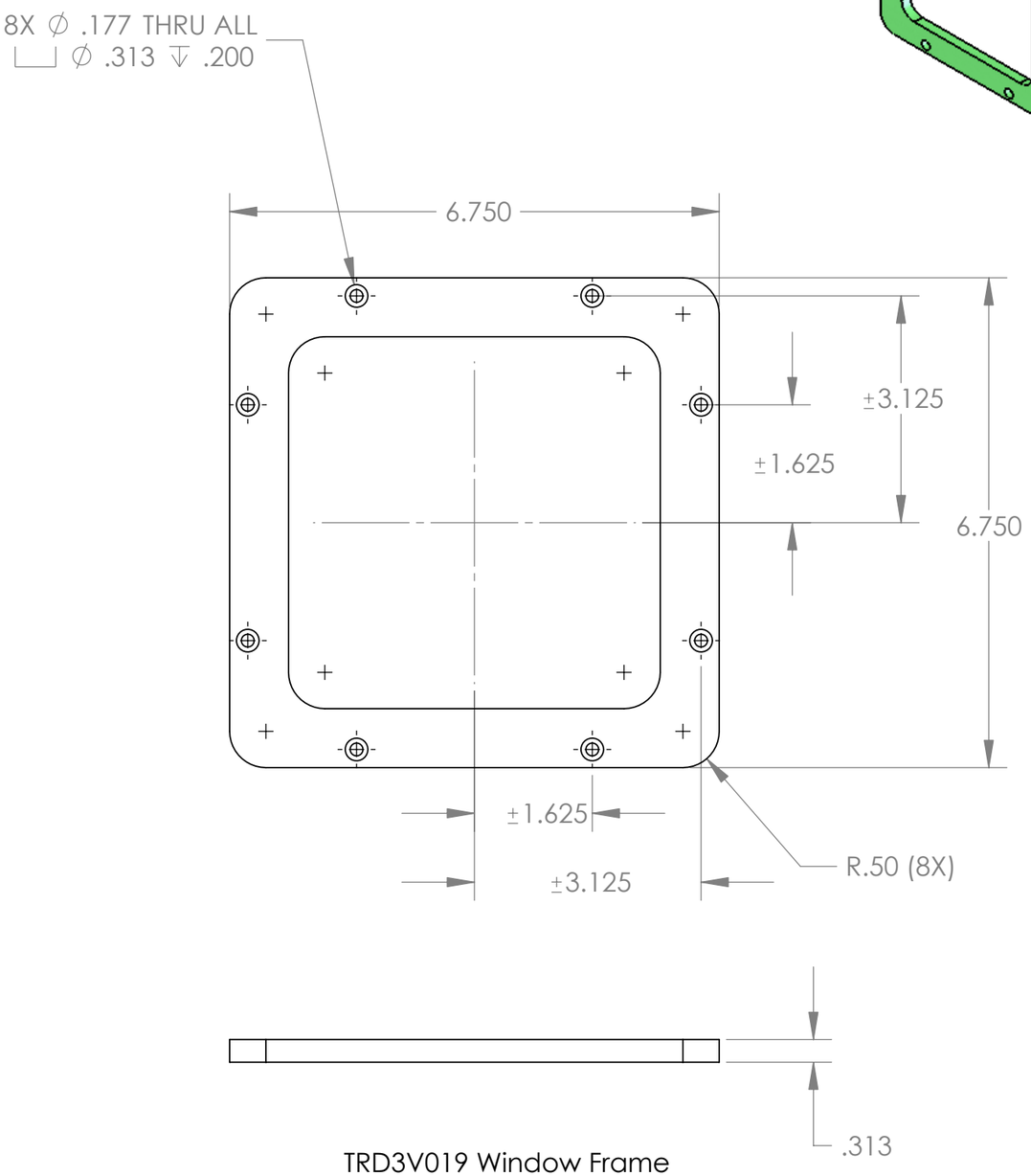

TRD3V019 Window Frame

MTRL: 6061 AL.
QNTY: 1 PER EACH DEWAR

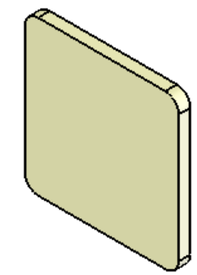

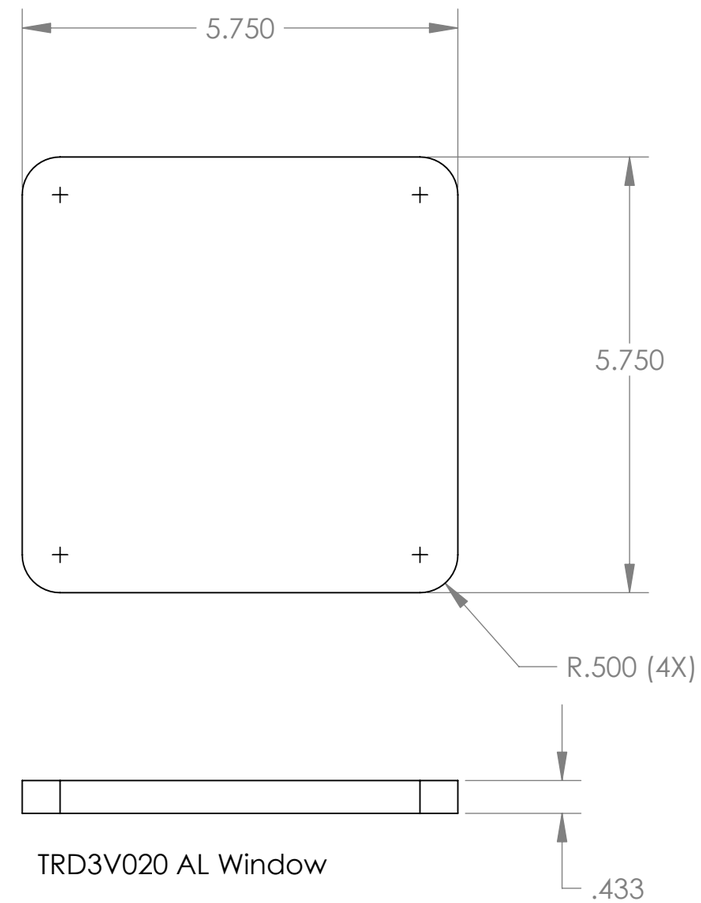

TRD3V020 AL Window

MTRL: 6061 AL.
QNTY: 1 PER EACH DEWAR

UNLESS OTHERWISE SPECIFIED DIMENSIONS ARE IN INCHES, REMOVE BURS AND BREAK SHARP EDGES 0.005-0.010

TOLERANCES: .XX ±.010 .XXX ±.005
ANGLES ±0.5° UNLESS NOTED,
ALL SURFACES 64 √ UNLESS NOTED

MATERIAL:

TRIPLESPEC

Cornell University
Center for Radiophysics and Space Research - Ithaca, NY 14853

NAME:	INIT.	DATE:
DRAWN:	CH	
CHECKED:		
APPROVED:		
FABRICATED:		

FILE: TRD3V019-20

TITLE: DEWAR WINDOW/FRAME

SIZE: B DRAWING NO. TRD3V019/20 REV 0

SCALE: DATE: 1/25/2007 SHEET 1 OF 1