| REVISIONS | | | | |
|---|---|---|---|---|
| ZONE | REV. | DESCRIPTION | DATE | APPROVED |
| | 0 | INITIAL RELEASE. | 04/02/07 | JCW |
| | 1 | CHANGED CENTER CUT OUT. | 05/01/07 | CH |

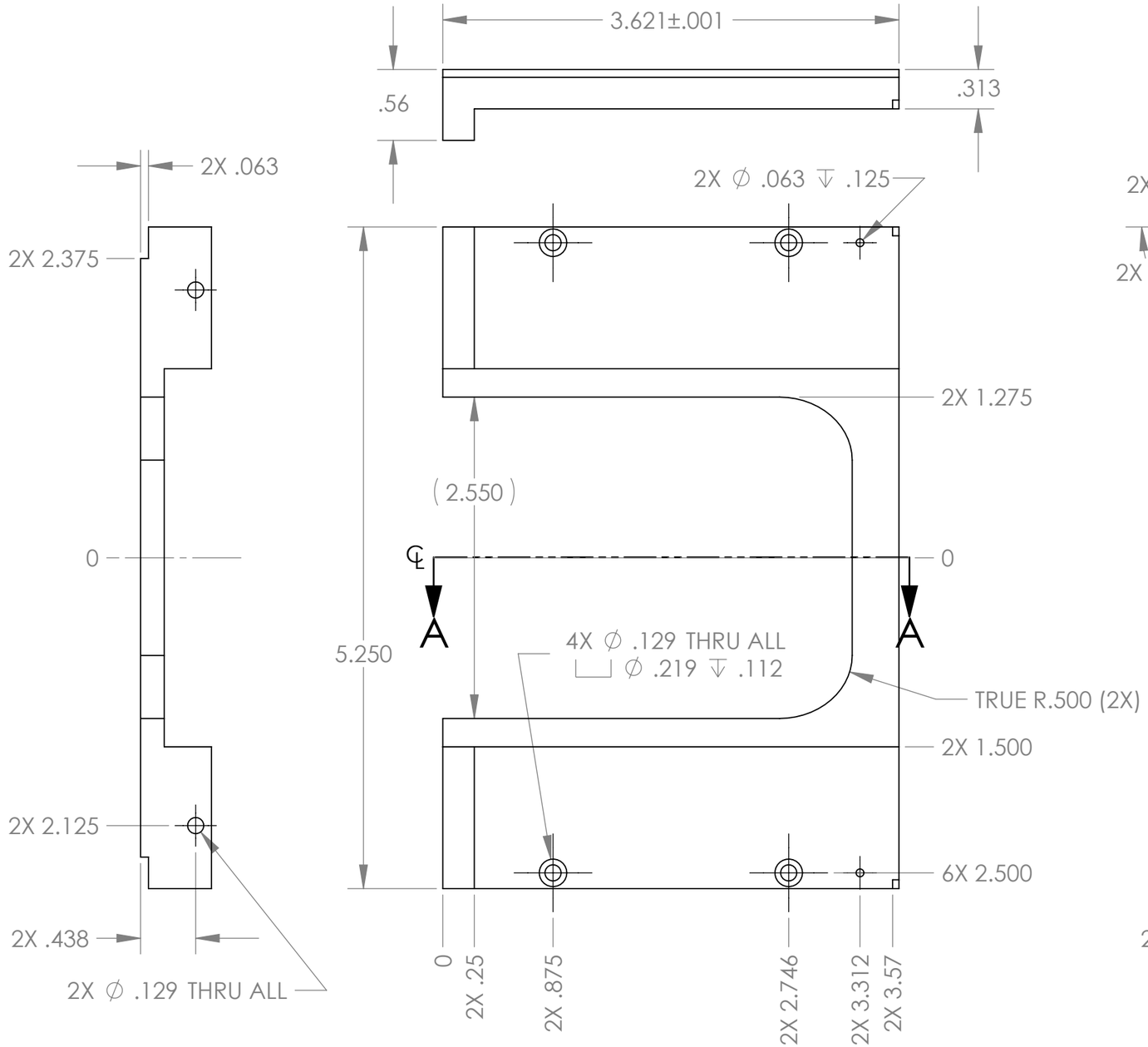


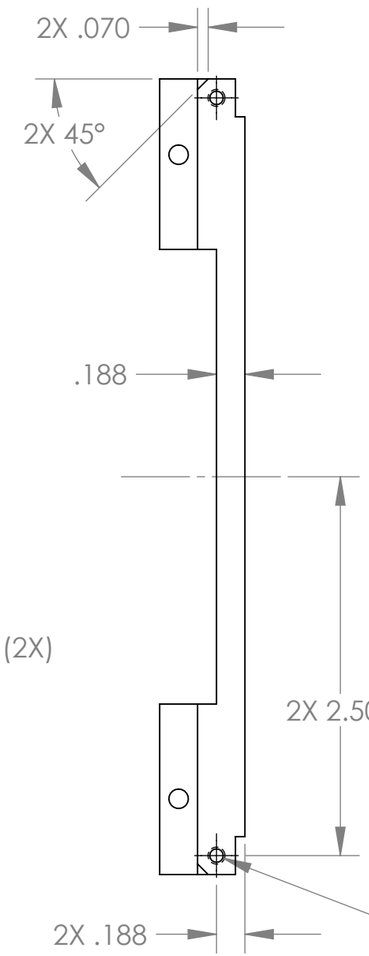


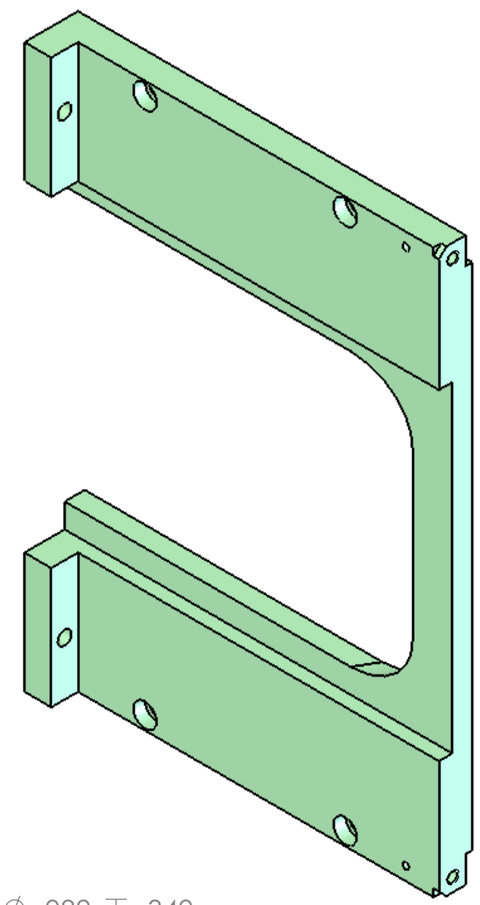

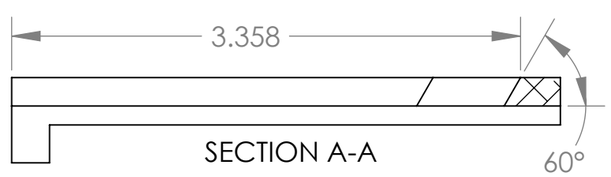


SECTION A-A

UNLESS OTHERWISE SPECIFIED DIMENSIONS ARE IN INCHES, REMOVE BURS AND BREAK SHARP EDGES 0.005-0.010

TOLERANCES: .XX ±.010 .XXX ±.005
ANGLES ±0.5° UNLESS NOTED,
ALL SURFACES 64 √ UNLESS NOTED

MATERIAL: 6061-T6 ALUM
QTY: 2

TRIPLESPEC

Cornell University
Center for Radiophysics and Space Research - Ithaca, NY 14853

| | NAME: | INIT. | DATE: |
|---|---|---|---|
| DRAWN: | SCP | SCP | 05/01/07 |
| CHECKED: | CH | CH | 05/01/07 |
| APPROVED: | | | |
| FABRICATED: | | | |

FILE: TRDOP47 FS Plate 1, Pal-Keck

TITLE: FS PLATE 1, Pal-Keck

SIZE: B | DRAWING # TRDOP47 | REV 1

SCALE: 1:1 | DATE: 5/1/2007 | SHEET 1 OF 1