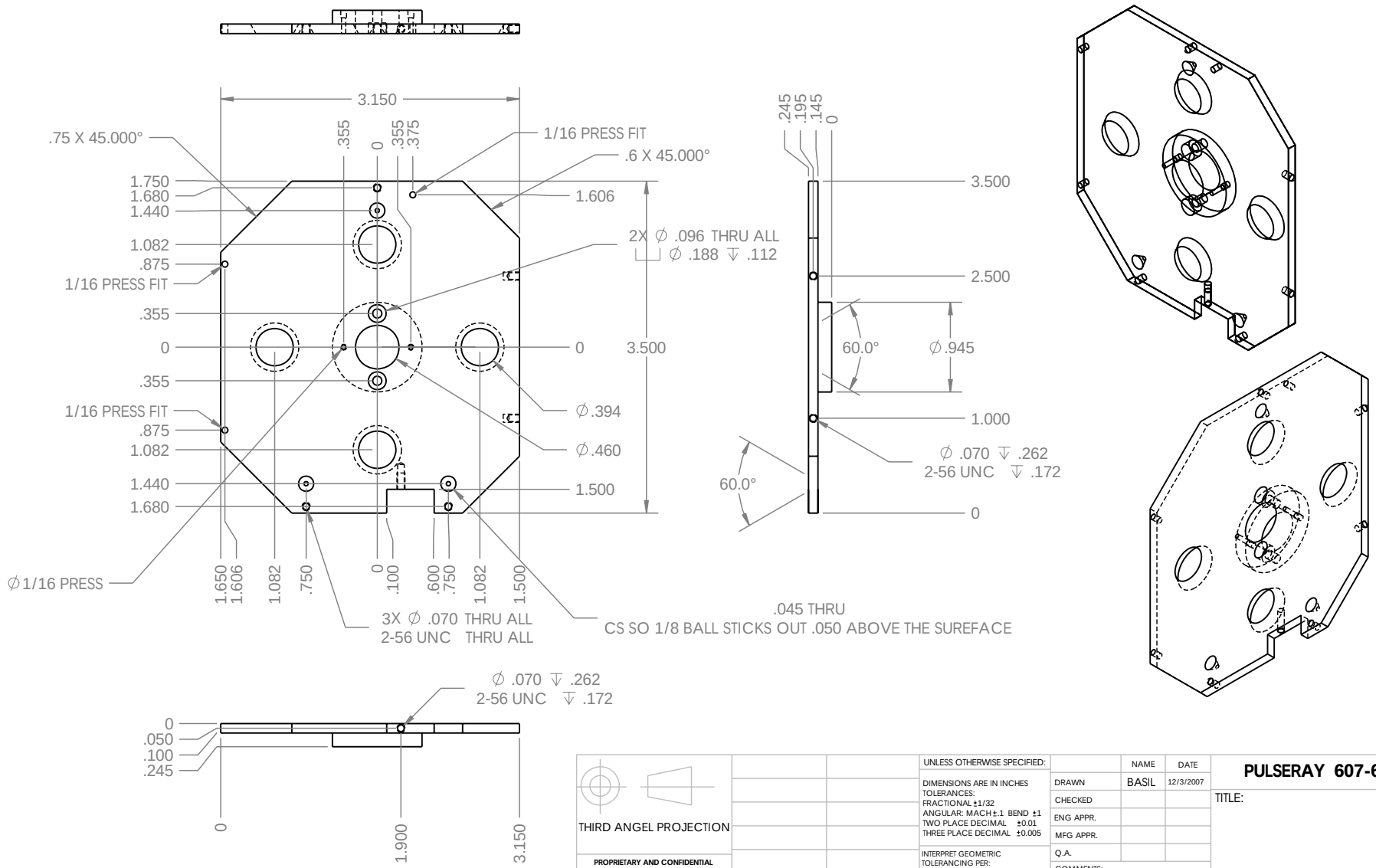

THIRD ANGEL PROJECTION

PROPRIETARY AND CONFIDENTIAL

THE INFORMATION CONTAINED IN THIS DRAWING IS THE SOLE PROPERTY OF PULSERAY. ANY REPRODUCTION IN PART OR AS A WHOLE WITHOUT THE WRITTEN PERMISSION OF PULSERAY IS PROHIBITED.

NEXT ASSY	USED ON
APPLICATION	

UNLESS OTHERWISE SPECIFIED:

DIMENSIONS ARE IN INCHES
TOLERANCES:
FRACTIONAL ±1/32
ANGULAR: MACH ±.1 BEND ±1
TWO PLACE DECIMAL ±0.01
THREE PLACE DECIMAL ±0.005

INTERPRET GEOMETRIC TOLERANCING PER:

MATERIAL

FINISH

DO NOT SCALE DRAWING

	NAME	DATE
DRAWN	BASIL	12/3/2007
CHECKED		
ENG APPR.		
MFG APPR.		
Q.A.		

COMMENTS:

PULSERAY 607-654-2070

TITLE:

SIZE | DWG. NO. | REV

B SLIT HOLDER A

SCALE: 1:1 | WEIGHT: | SHEET 1 OF 1